Practical OP-AMP Circuits

5. Integrator

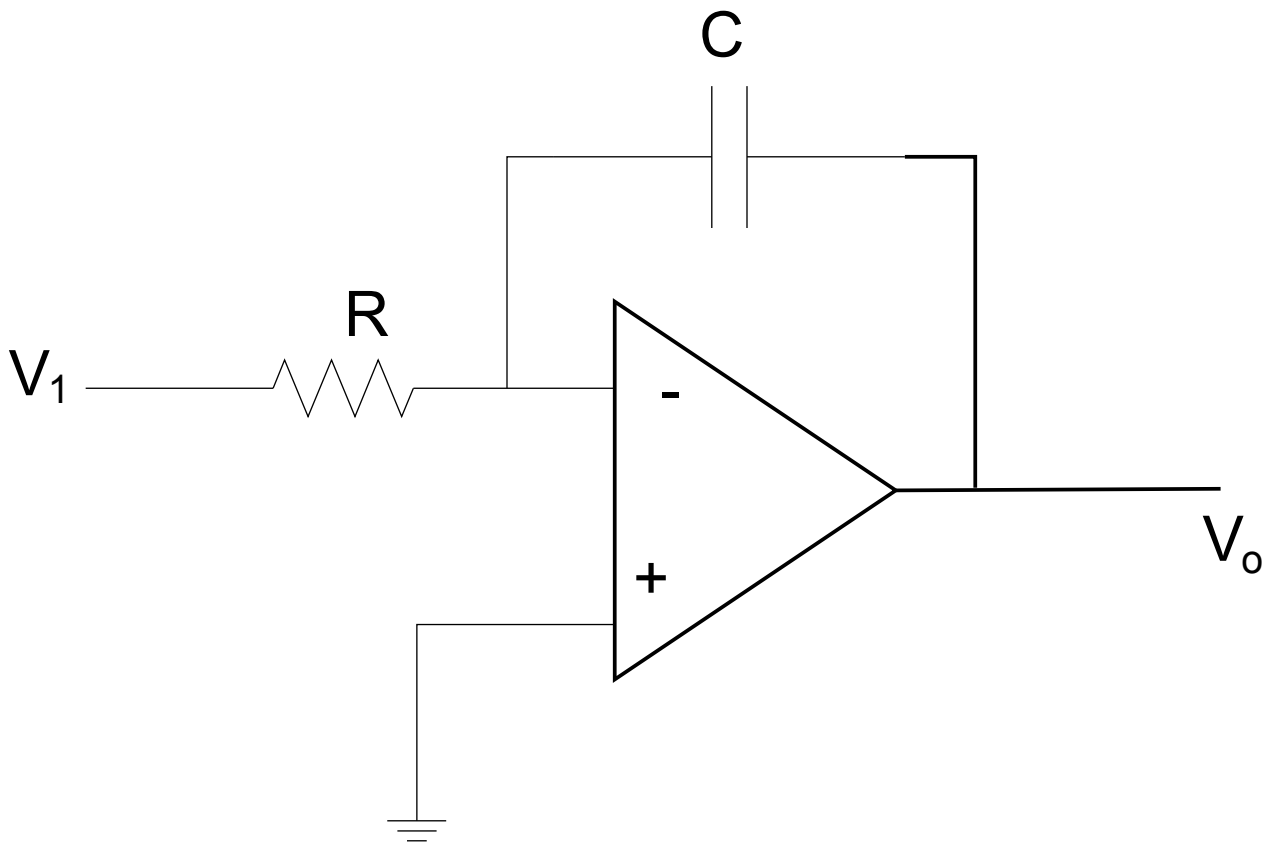

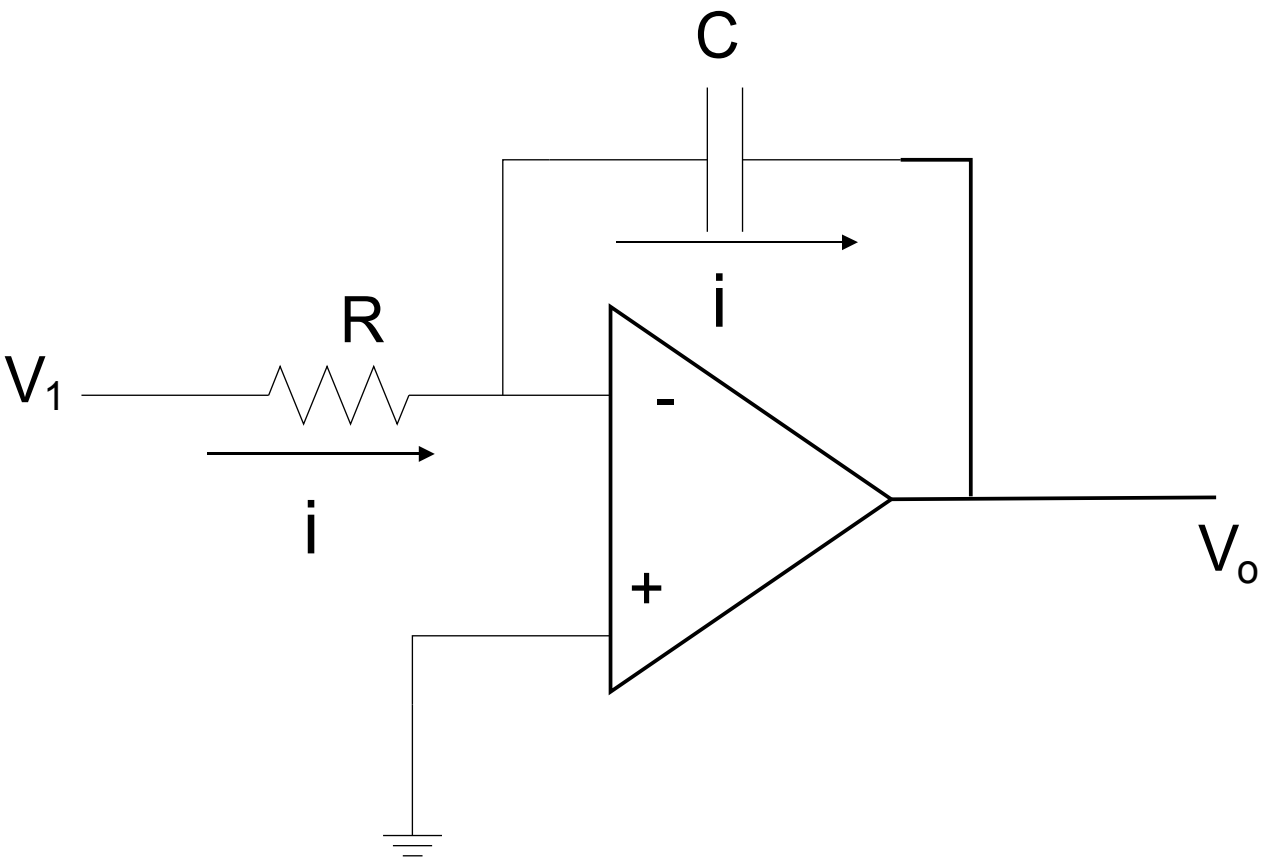

Integrator

$$v_1 - iR = 0$$

$$\text{or, } i = \frac{v_1}{R}$$

$$\text{Again, } \quad 0 - \frac{1}{C}\int i\,dt - v_o = 0$$

$$\text{or, } \quad v_o = -\frac{1}{C}\int i\,dt = -\frac{1}{C}\int \frac{v_1}{R}\,dt$$

$$\text{or, } v_o = -\frac{1}{RC}\int v_1\,dt$$

6. Differentiator

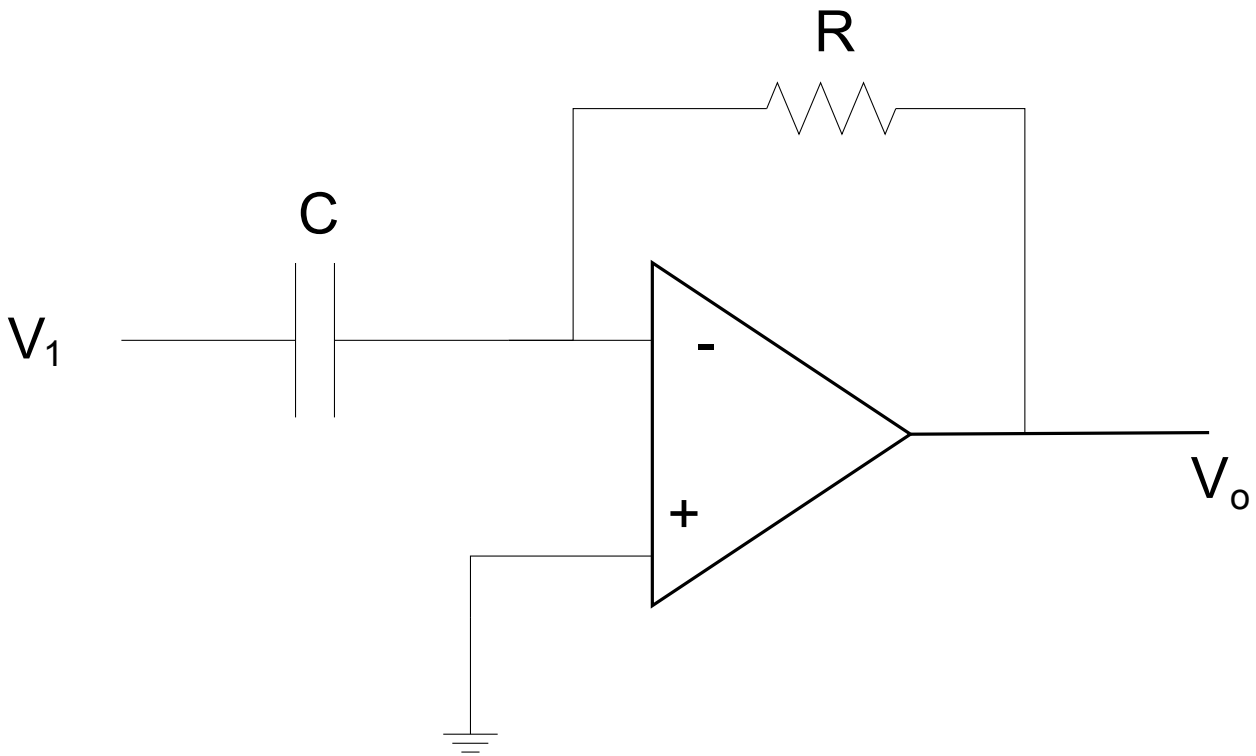

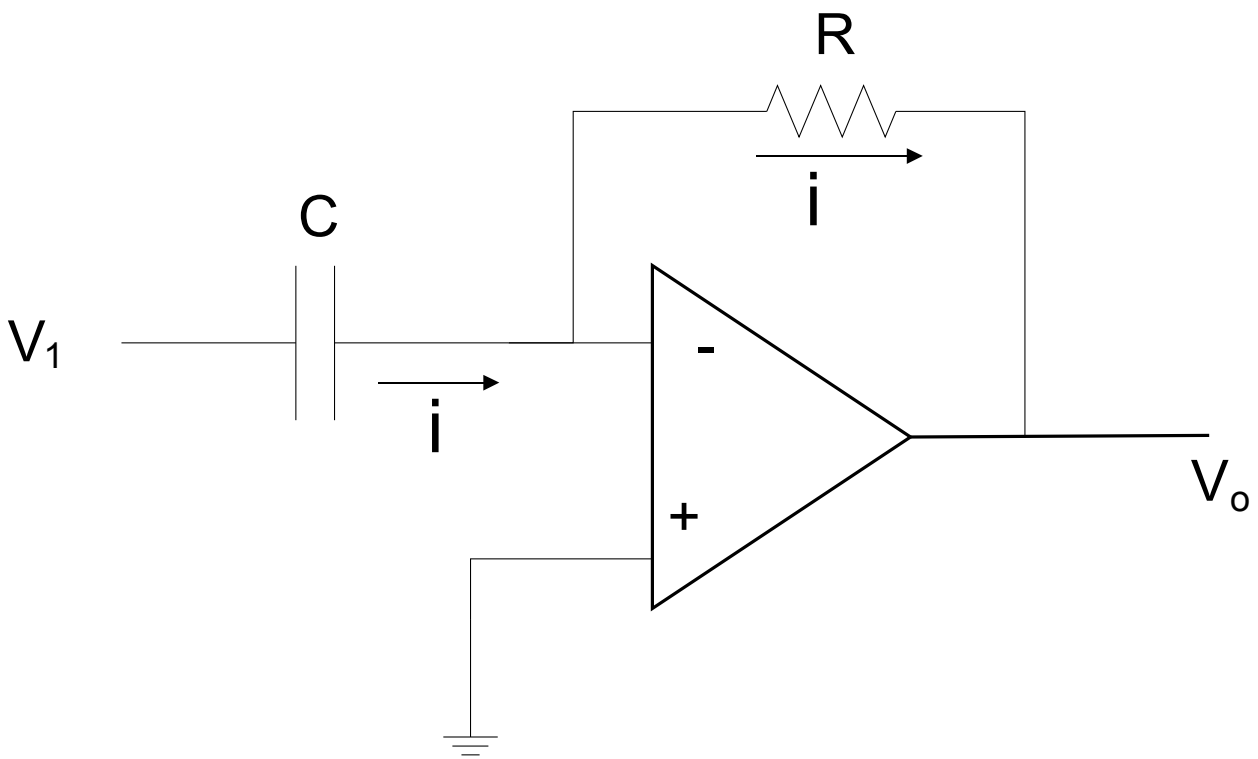

Differentiator

$$v_1 - \frac{1}{C}\int i\,dt = 0$$

$$\text{or,}\quad v_1 = \frac{1}{C}\int i\,dt$$

$$\text{or,}\quad \frac{dv_1}{dt} = \frac{1}{C} i$$

$$or,\ i = C\frac{dv_1}{dt}$$

$$Again,\ \ 0 - iR = v_o$$

$$\text{or, } v_o = -C\frac{dv_1}{dt}R$$

$$or, v_o = -RC\frac{dv_1}{dt}$$

7. Voltage Subtractor or Difference

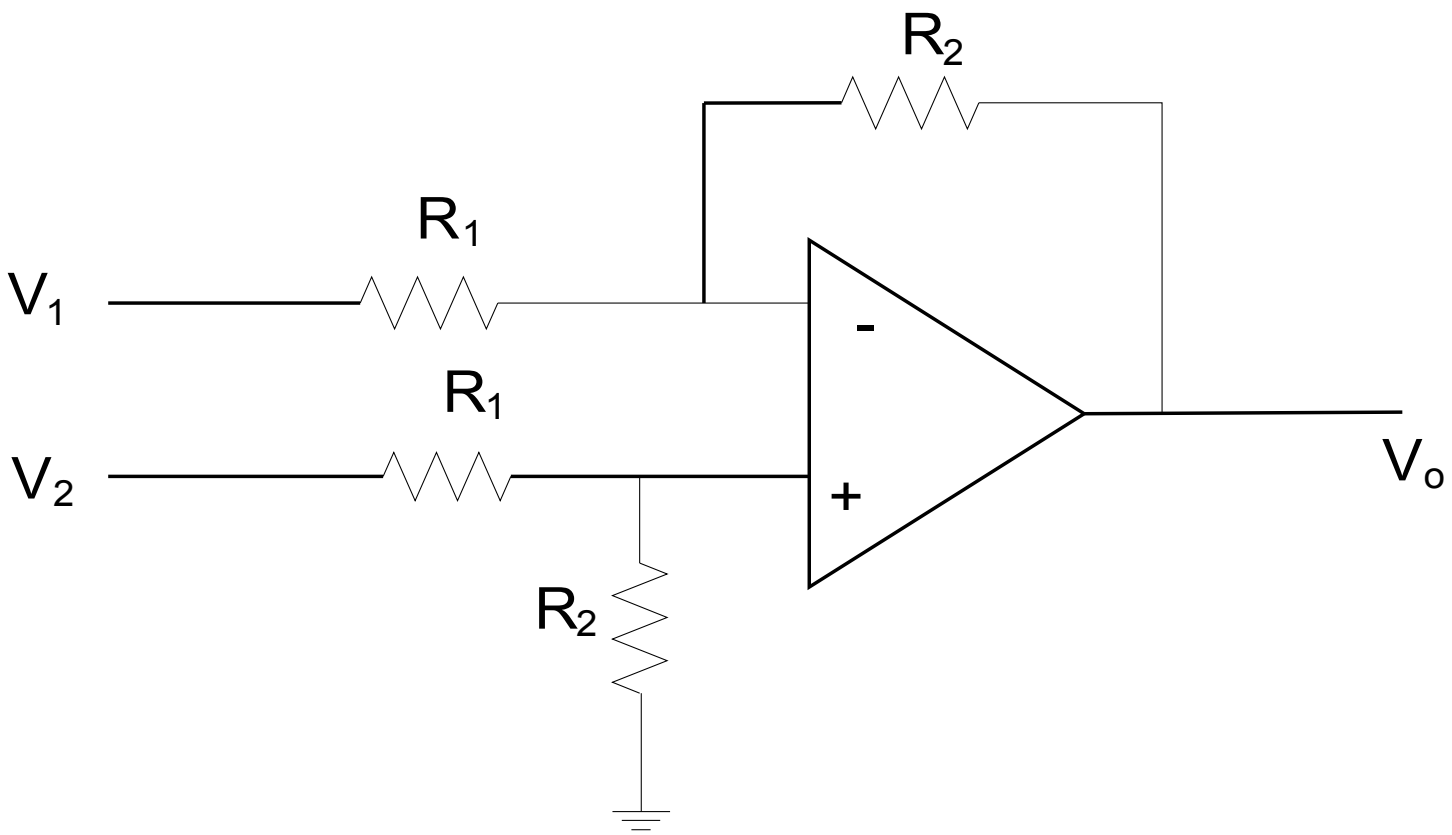

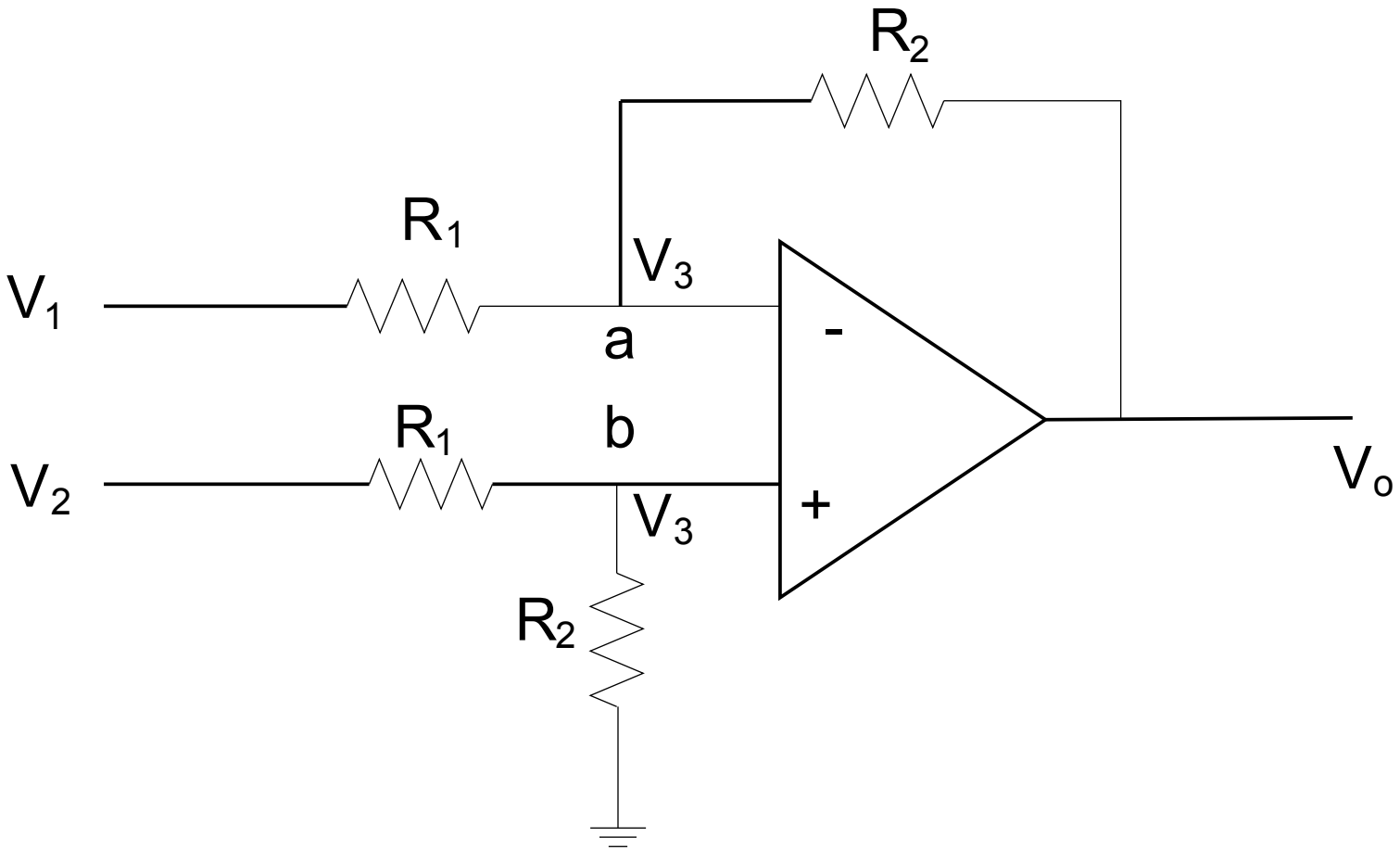
R2
R1
V3
V1
a
-
R1
b
V2
+
V3
Vo
R2

Applying KCL at node ‘a’ ,

$$(V_1 - V_3)/R_1 = (V_3 - V_0)/R_2 \qquad (1)$$

Applying KCL at node ‘b’,

$$(V_2 - V_3)/R_1 = V_3/R_2 \qquad (2)$$

Rearranging (1), we get,

$$(1/R_1 + 1/R_2)V_3 - V_1/R_1 = V_0/R_2 \qquad (3)$$

Rearranging (2), we get,

$$(1/R_1 + 1/R_2)V_3 - V_2/R_1 = 0 \qquad (4)$$

(3) – (4), we get,

$$(V_2 - V_1)/R_1 = V_o/R_2$$

or, $$V_o = R_2/R_1(V_2 - V_1)$$

Ex.1

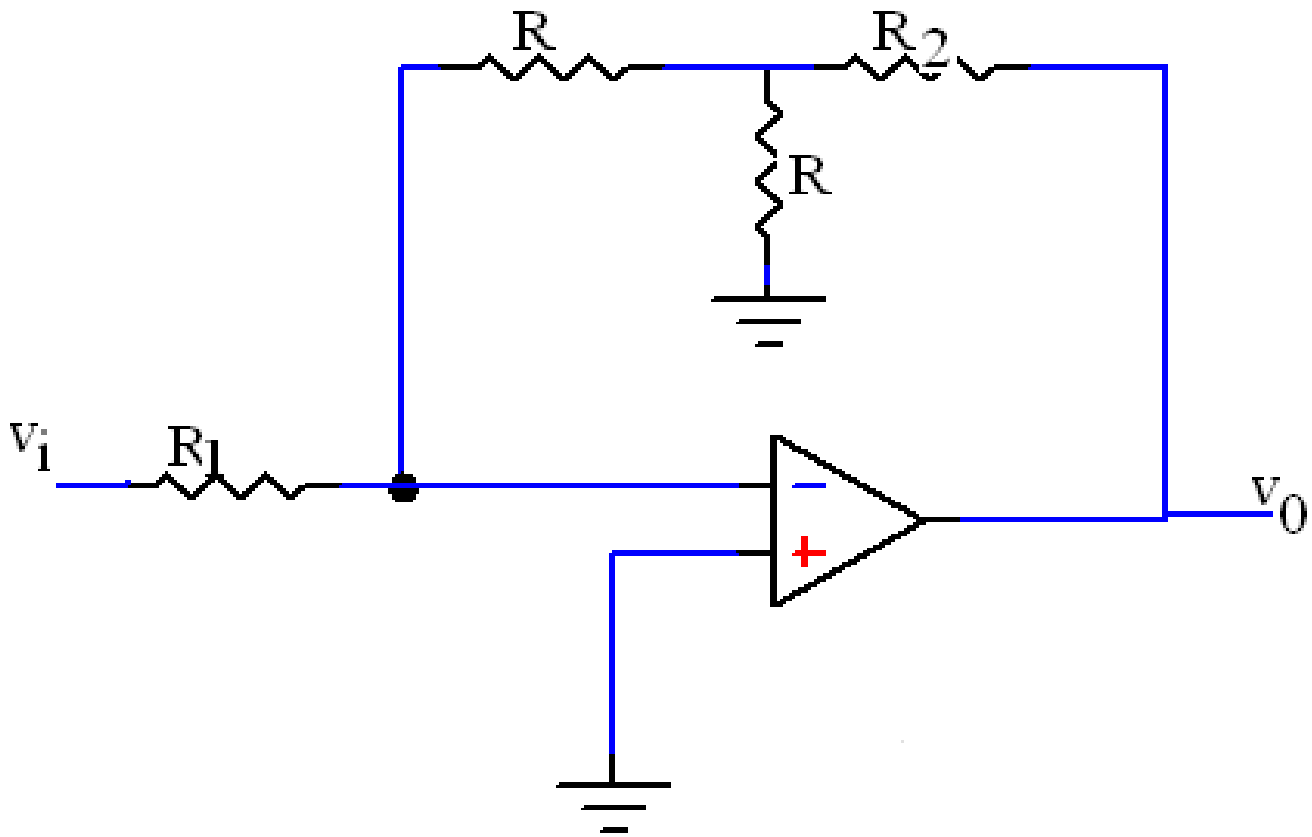

For the amplifier circuit find v_o/v_1

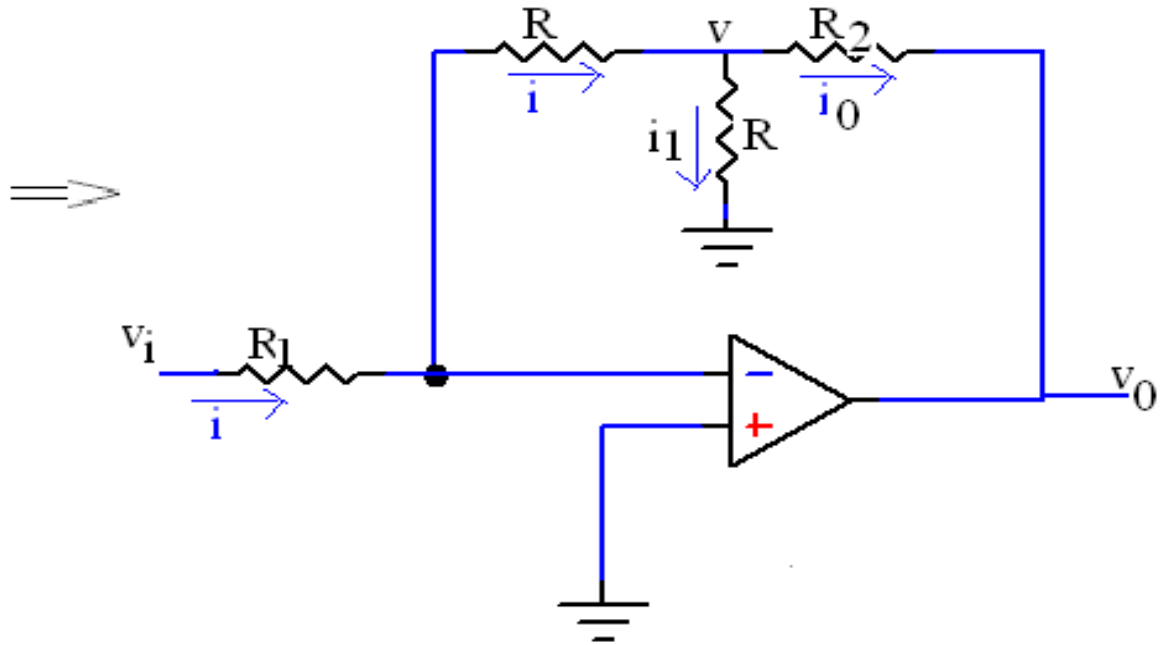
R
v
R2
i
i0
i1
R
vi
R1
i
v0

Solution :

$$i_o = i - i_1 = v_i/R_1 - v/R = v_i/R_1 - (-iR)/R$$

$$= v_i/R_1 + i = v_i/R_1 + v_i/R_1 = 2v_i/R_1$$

$$v_o = v - i_oR_2$$

$$= -iR - 2v_iR_2/R_1$$

$$= -v_iR/R_1 - 2v_iR_2/R_1$$

or, $v_o = -v_i(R + 2R_2)/R_1$

Hence,

$$v_o/v_i = -(R + 2R_2)/R$$

Ex.1) Find V_o in the following circuit.

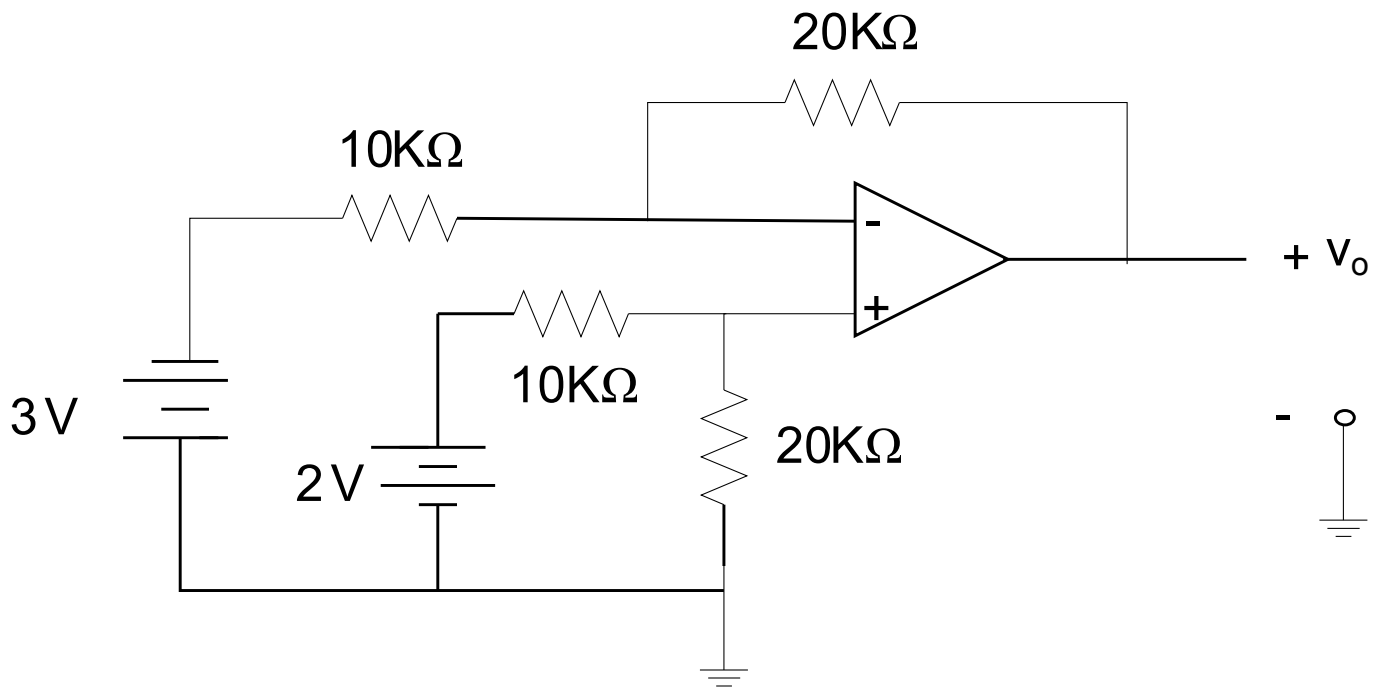

Solution

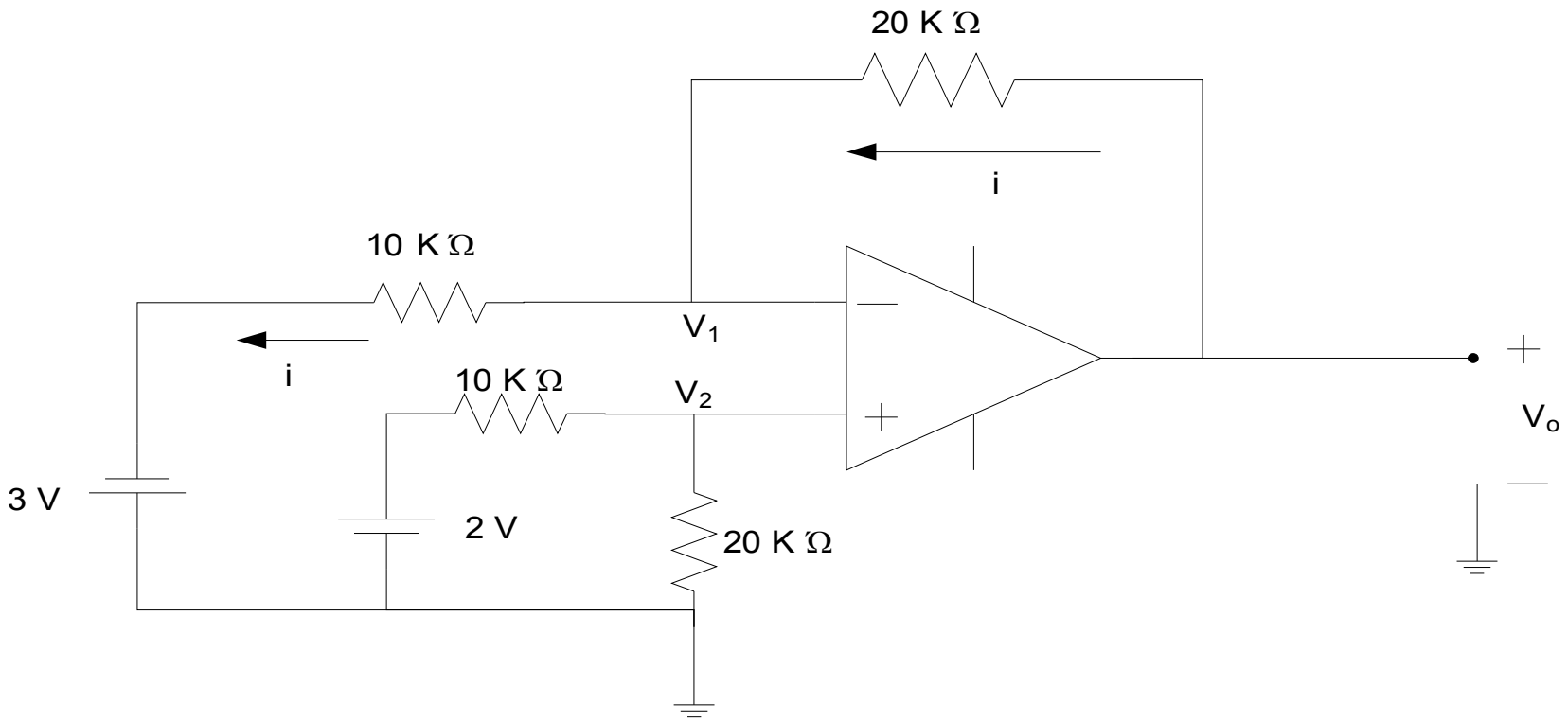

$$V_2 = 2V \times \frac{20}{20+10} = 2V \times \frac{20}{30} = \frac{4}{3}V$$

$V_2 = V_1 = 4/3$ V

$$\frac{Vo - V_1}{20} = \frac{V_1 + 3}{10}$$

Or, Vo – 4/3 = 2(4/3 +3)

Or, Vo = 4/3 + 8/3 + 6 = 10 V