Practical OP-AMP Circuits

Op-Amp Applications

- ***Controlled Sources***

(c) Voltage Controlled Voltage Source (VCVS)

(b) Voltage Controlled Current Source (VCCS)

(c) Current Controlled Voltage Source (CCVS)

(d) Current Controlled Current Source (CCCS)

(a) Voltage Controlled Voltage Source (VCVS)

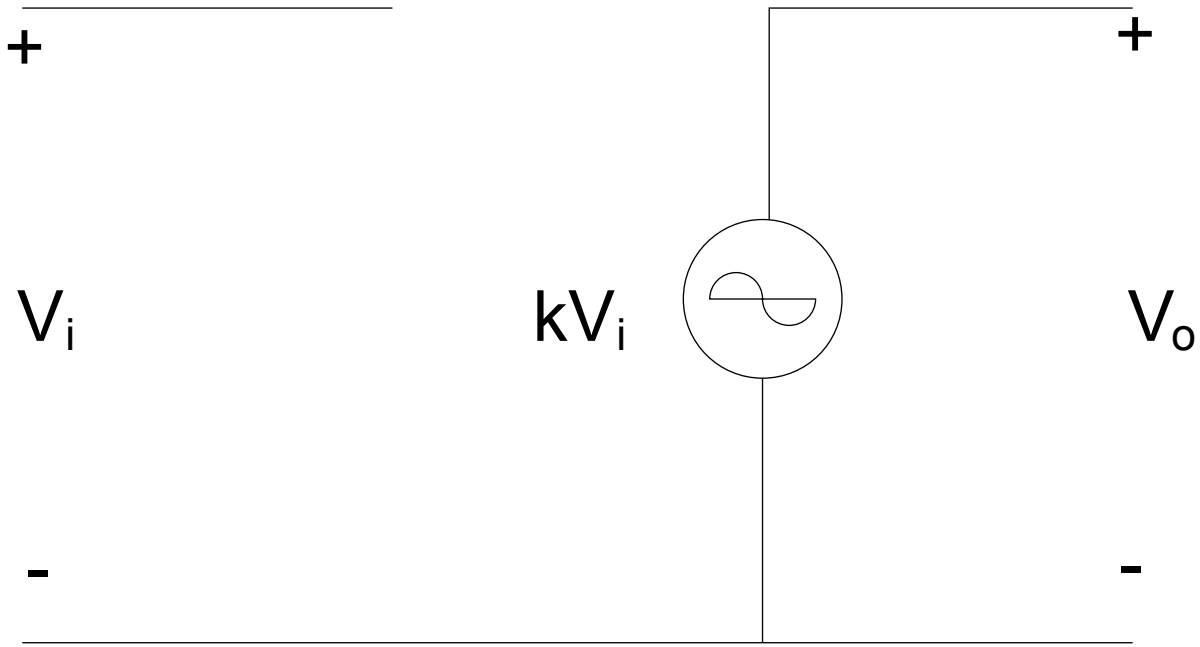

$$V_o = kV_i$$

Ideal voltage controlled voltage source

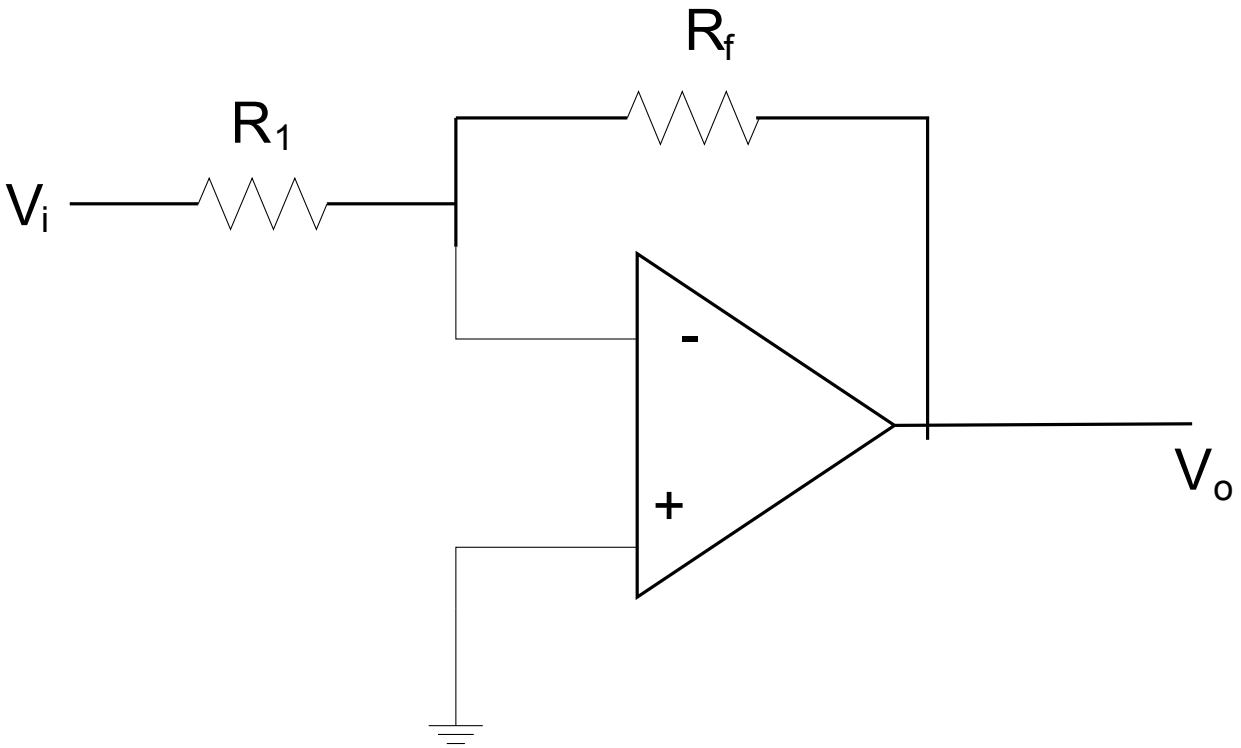

$$V_o = -\frac{R_f}{R_1} V_i = kV_i$$

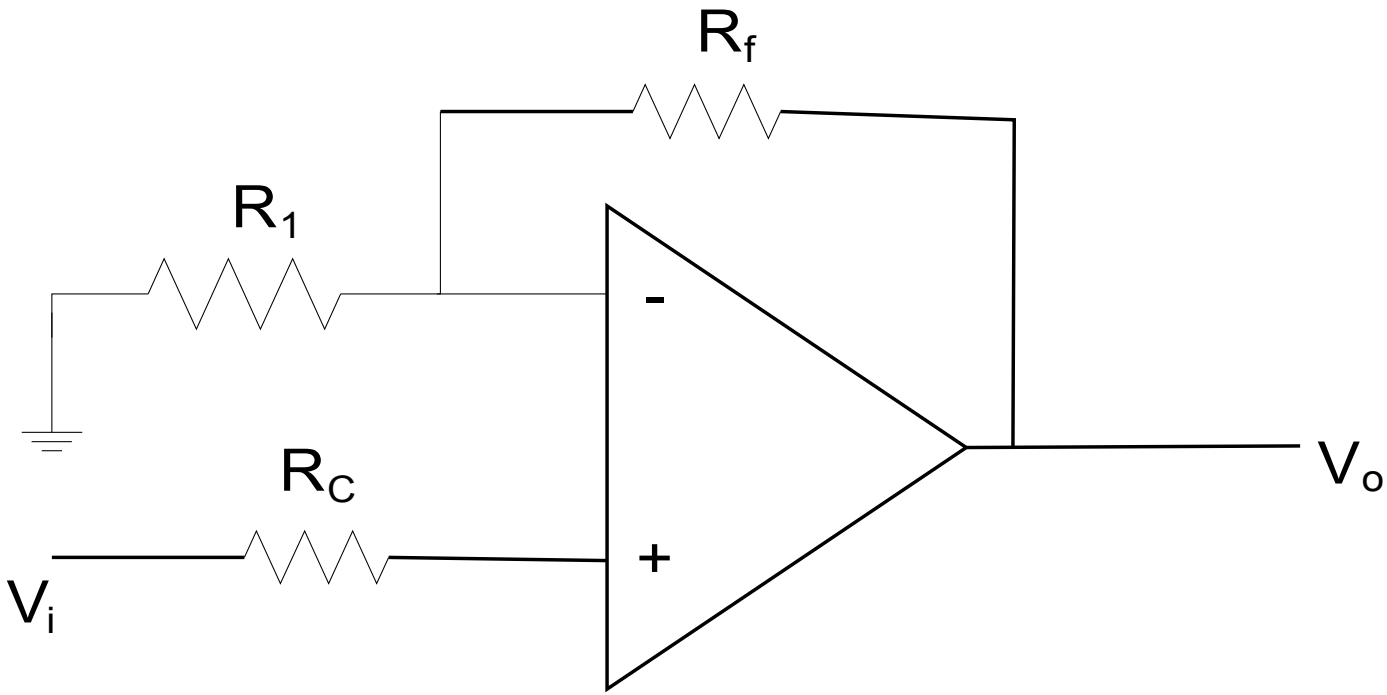

$$V_o = \left(1 + \frac{R_f}{R_1}\right) V_i = kV_i$$

(b) Voltage Controlled Current Source (VCCS)

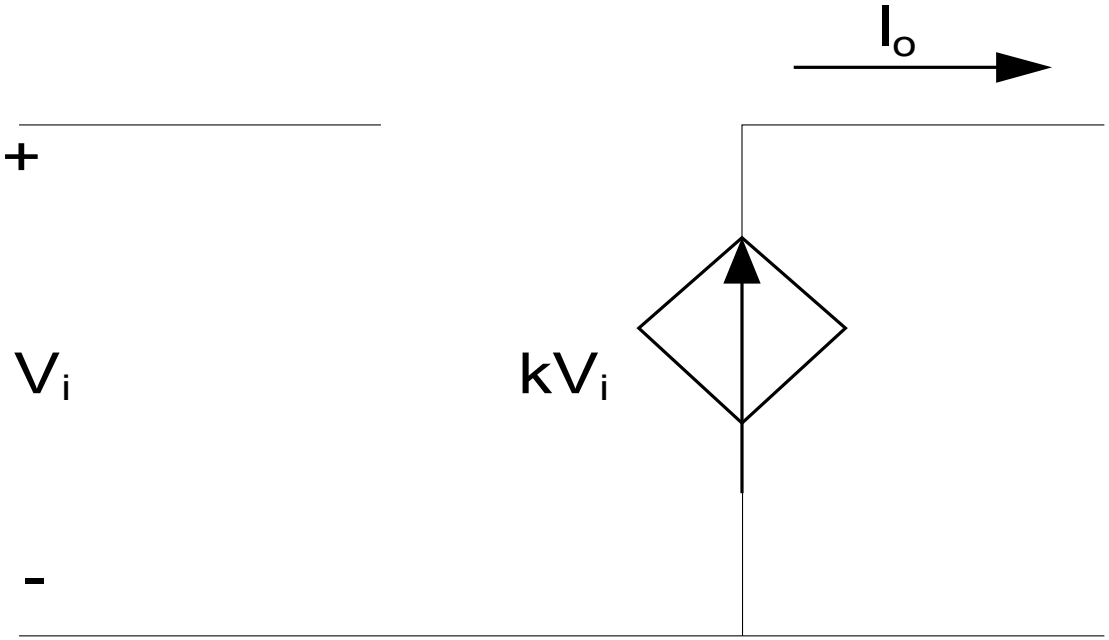

$$I_o = kV_i$$

Ideal voltage controlled current source

(b) Voltage Controlled Current Source (VCCS)

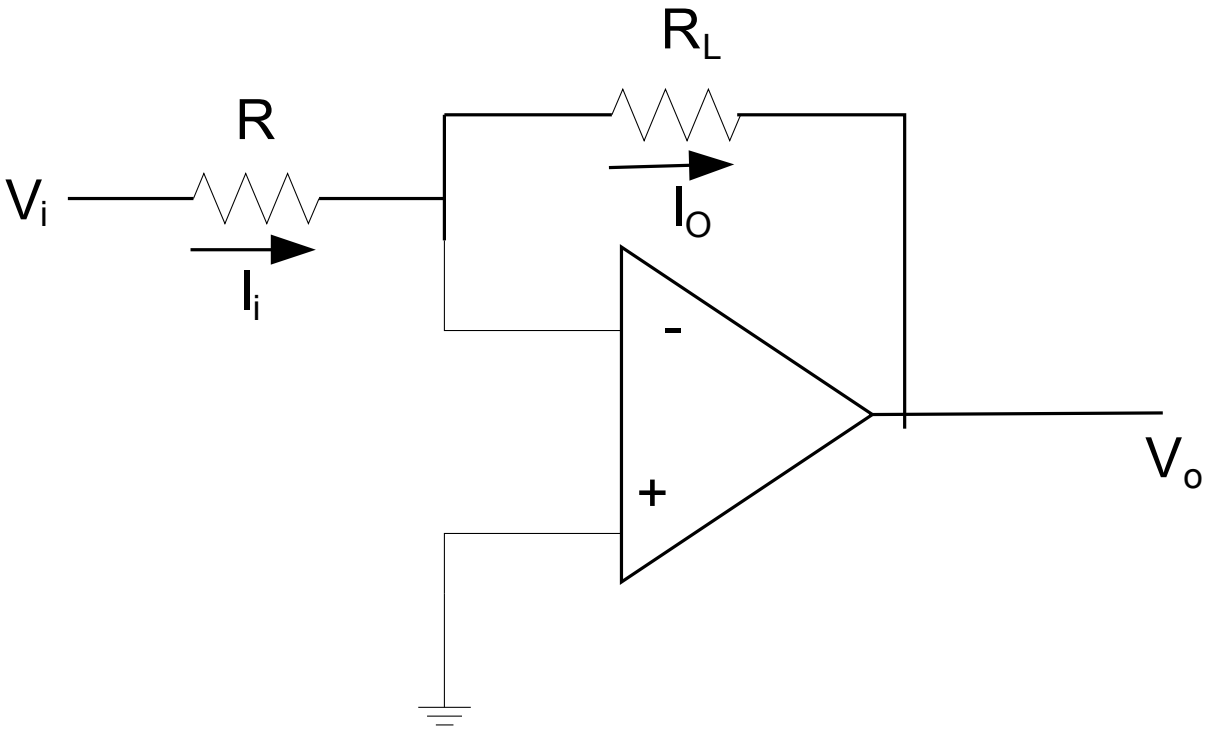

$$I_o = I_i = \frac{V_i}{R} = \frac{1}{R} V_i = kV_i$$

Voltage Controlled Current Source (VCCS)

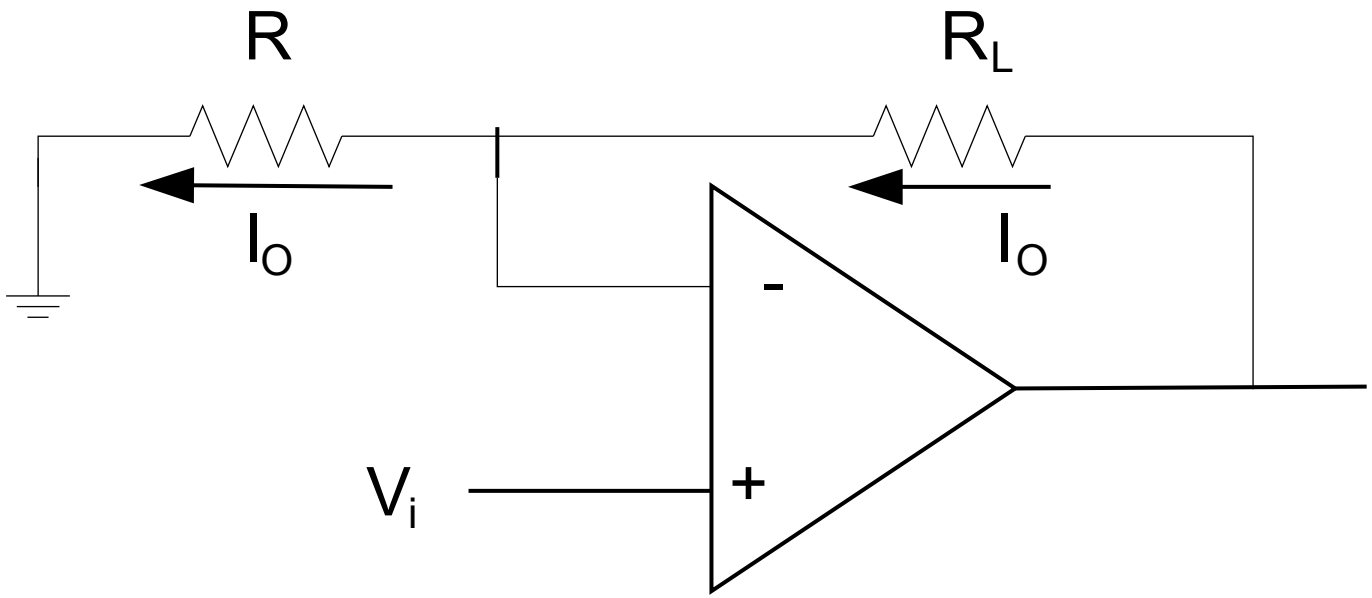

This circuit is useful when the load R_L is floating

(c) Current Controlled Voltage Source (CCVS)

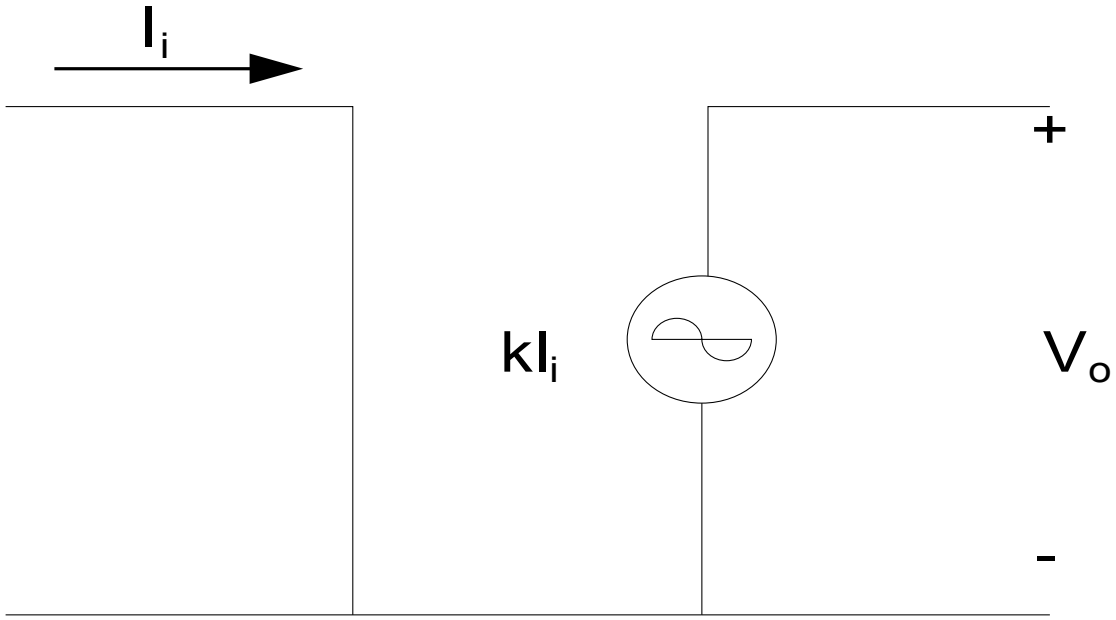

$$V_o = kI_i$$

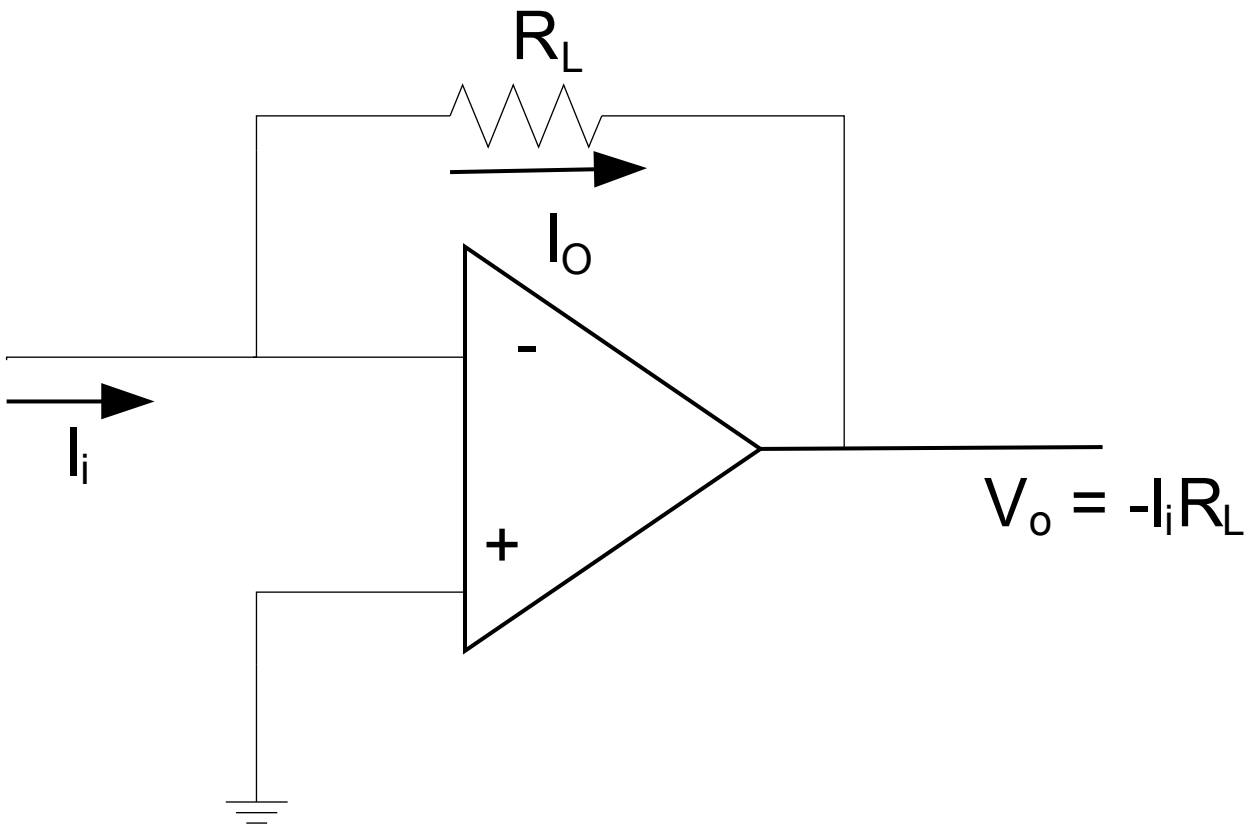
R_L
I_O
-
+
I_i
$V_o = -I_i R_L$

Current Controlled Voltage Source (CCVS)

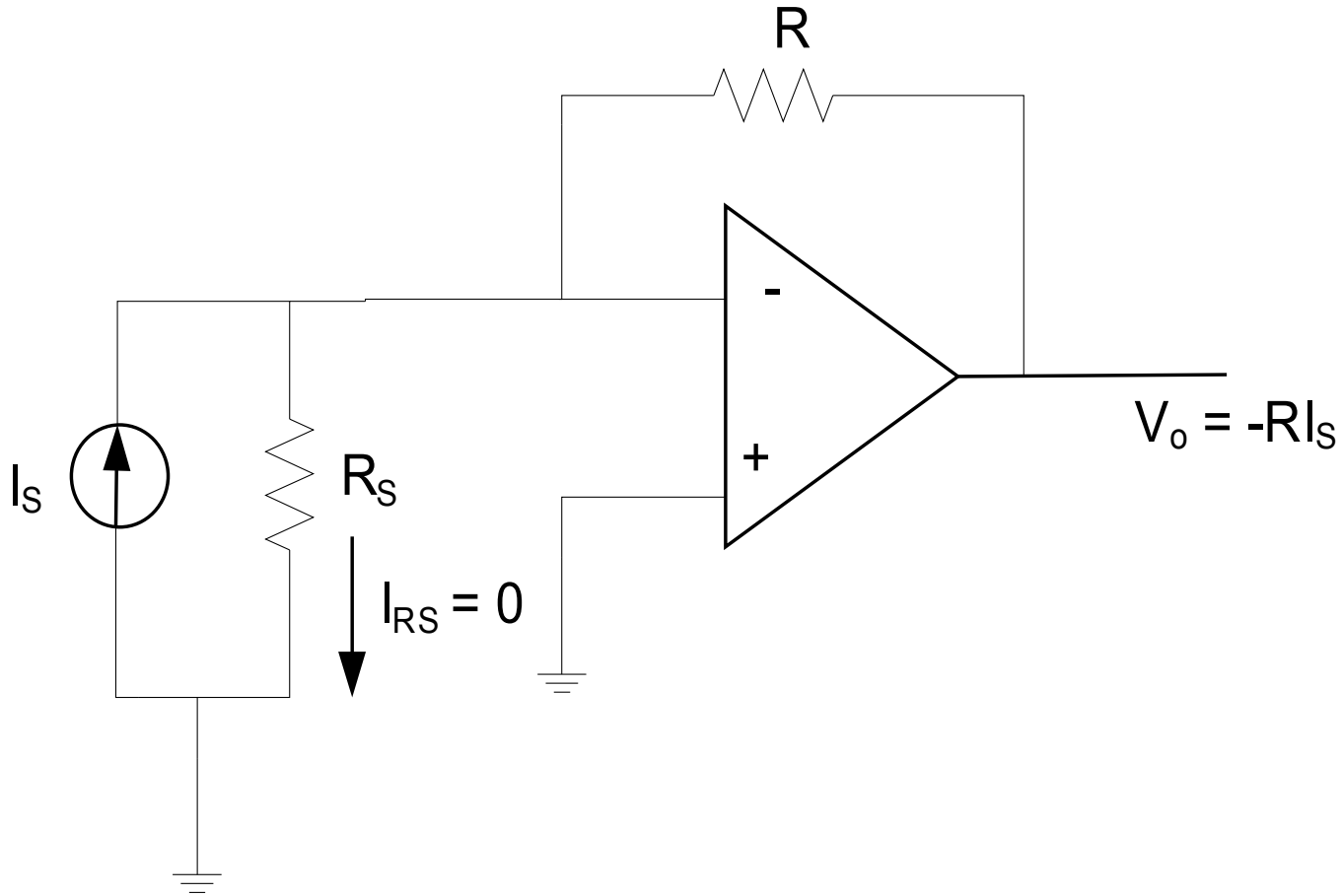

(d) Current Controlled Current Source (CCCS)

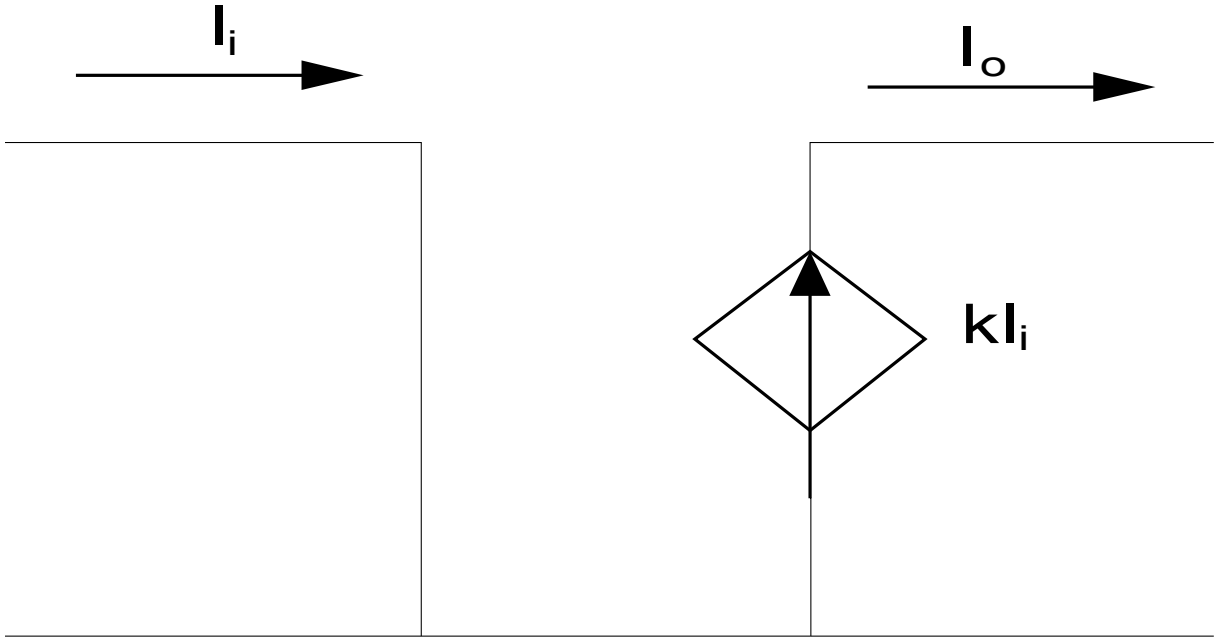

$$I_o = kI_i$$

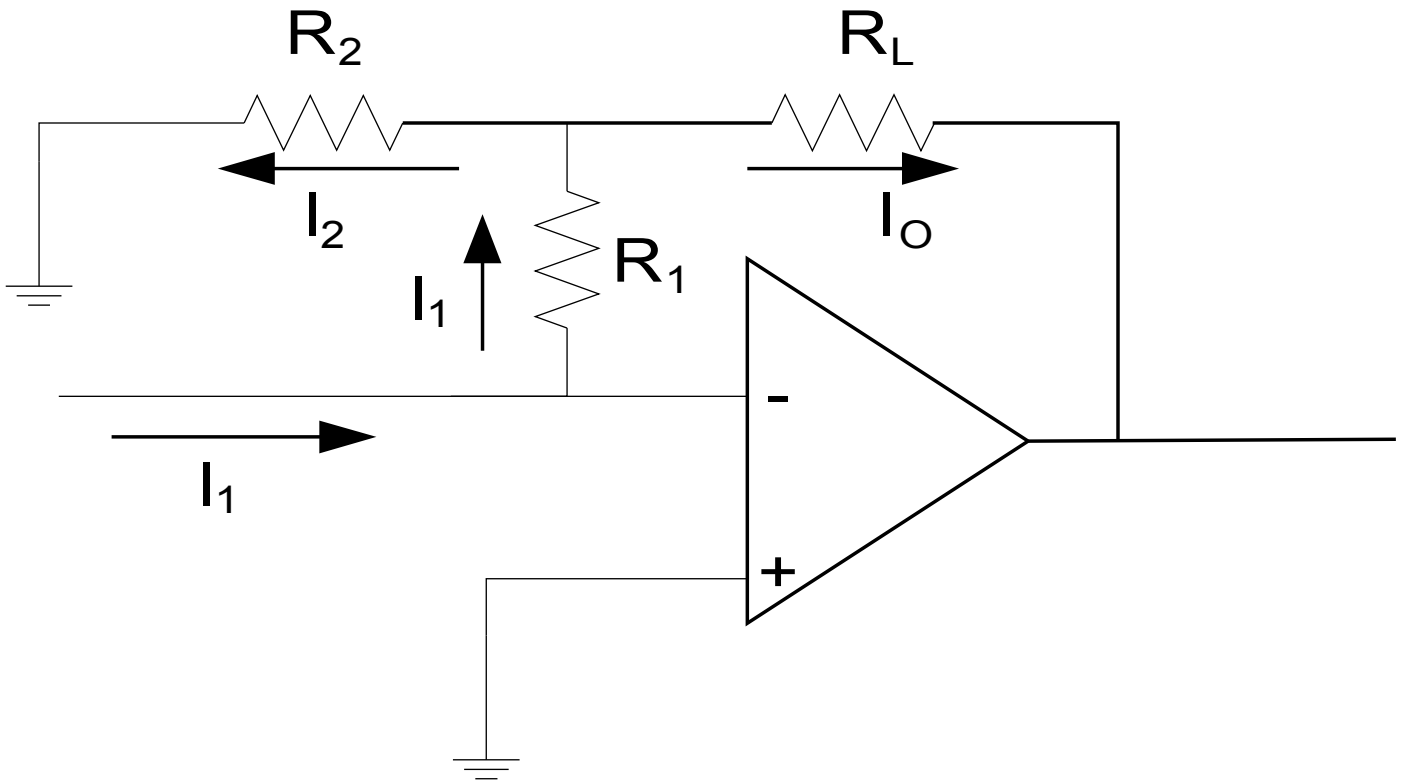

$$I_1 = I_o + I_2$$

$$I_o = I_1 - I_2 = I_1 - \left(\frac{-I_1 R_1}{R_2} \right) = I_1 \left(1 + \frac{R_1}{R_2} \right) = kI_1$$